SPECIAL PACKAGING INSTRUCTION

Form Approved
OMB No. 0704-0188

-BM

Public reporting burden for this collection of information is estimated to average 30 days per response, including the time for reviewing instructions, searching existing data sources, gathering and maintaining the data needed, and completing and reviewing the collection of information. Send comments regarding this burden estimate or any other aspect of this collection of information, including suggestions for reducing this burden, to Washington Headquarters Services, Directorate for Information Operations and Reports, 1215 Jefferson Davis Highway, Suite 1204, Arlington, Va 22202-4302, and to the Office of Management and Budget, Paperwork Reduction Project(0704-0188), Washington, DC 20503. Please do not return your form to either of these addresses.

1. PART OR DRAWING NO. (CAGE) NOMENCLATURE 8705914 (19207) TRACK SHOE, VEHICULAR			2. CAGE 19207	3. SPI NO. AK06929316
4. NATIONAL STOCK NO. 2530-00-692-9316			5. DATE OF DRAWING 10-19-99	6. REVISION L
7. QUP 1 EACH	8. ICQ NONE	9. UNIT PACK WT.(LB) 70.0	10. UNIT PACK CU (CU. FT.) 1.479	11. UNIT PACK SIZE (INCHES) 28.1 X 10.7 X 8.5

	18. STEPS	19. REQD	20. DESCRIPTION
12. MILITARY PRESERVATION	1-C		ITEM PREPARATION: SEE NOTE
MIL-STD-2073-1C, METHOD 20 & NOTE A			
13. CLEANING	2-D		PRESERVATIVE: MIL-PRF-16173, GR 1
MIL-STD-2073-1C &NOTE B			
14. DRYING	3		IDENTIFICATION REQUIRED
MIL-STD-2073-1C &NOTE B			
15. PACKING	4-E		BLOCKING/BRACING: MIL-STD 1186
a. LEVEL A			
MIL-STD-2073-1C	5-F		STRAPPING, STEEL: ASTM D 3953. SEE NOTE
b. LEVEL B			
MIL-STD-2073-1C			
16. MARKING			
MIL-STD-129			

1. NOTES/DRAWINGS

A. THE UNIT PACK SHALL PROVIDE PHYSICAL AND MECHANICAL PROTECTION TOGETHER WITH A PRESERVATIVE COATING.

B. CLEAN AND DRY ITEM BY ANY SUITABLE PROCESS BEFORE APPLICATION OF PACKAGING MATERIALS.

C. ASSEMBLE INTO (8) SHOE SECTIONS.

D. PRESERVATIVE SHALL BE APPLIED TO ALL UNPAINTED METAL SURFACES IAW ITEM DRAWING. APPLICATION MAY BE ACCOMPLISHED BY DIPPING, SPRAYING OR BRUSHING. PRESERVATIVE ON RUBBER COMPONENTS IS PERMISSIBLE.

E. PACK TWO SECTIONS OF (8) EACH SHOES FLAT AS SHOWN ON PAGE 2.

F. TYPE 1, FINISH A, 1-1/4 WIDE STRAPPING SHALL BE WRAPPED AROUND TRACK SHOES SECURING SHOES TO BLOCKING. SEE PAGE 2 ITEM D.

TYPE 2, FINISH A, 1-1/4 WIDE STRAPPING SHALL BE WRAPPED AROUND EACH END OF THE BLOCKING AND SECURED IN PLACE WITH NAILS. SEE PAGE 2 ITEM E.

SPECIAL PACKAGING INSTRUCTION (Continuation Sheet)

Form Approved
OMB No. 0704-0188

-BM

Public reporting burden for this collection of information is estimated to average 30 days per response, including the time for reviewing instructions, searching existing data sources, gathering and maintaining the data needed, and completing and reviewing the collection of information. Send comments regarding this burden estimate or any other aspect of this collection of information, including suggestions for reducing this burden, to Washington Headquarters Services, Directorate for Information Operations and Reports, 1215 Jefferson Davis Highway, Suite 1204, Arlington, Va 22202-4302, and to the Office of Management and Budget, Paperwork Reduction Project(0704-0188). Washington, DC 20503. Please do not return your form to either of these addresses.

1. PART OR DRAWING NO. (CAGE) NOMENCLATURE	2. CAGE	3. SPI NO.
8705914 (19207) TRACK SHOE, VEHICULAR	19207	AK06929316
4. NATIONAL STOCK NO.	**5. DATE**	**6. REVISION**
2530-00-692-9316	10-19-99	L

17. NOTES/DRAWINGS *CONTINUED*

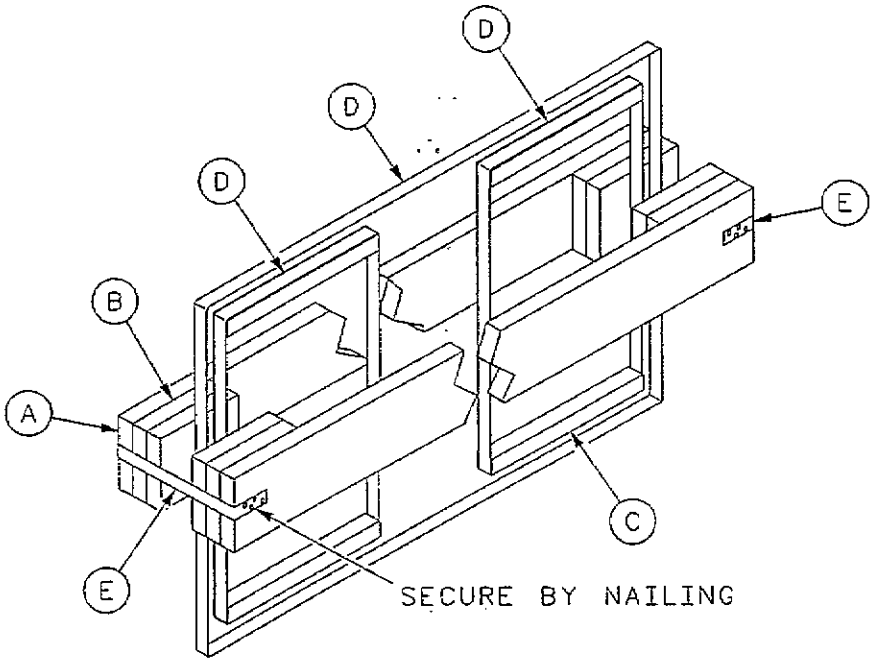

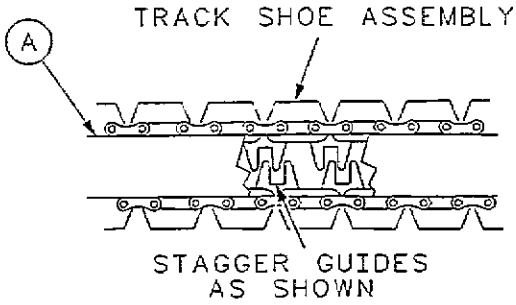

BLOCKING/BRACING/STRAPING

ITEM	SIZE	QTY
A	2X6(NOM)X60	2 EA.
B	2X6(NOM)X8	8 EA.
C	2X2(NOM)X16	4 EA.
D	1 1/4 METAL STRAPPING	
E	1 1/4 METAL STRAPPING SECURED BY NAILING	