SPECIAL PACKAGING INSTRUCTION

Form Approved -SS
OMB No. 0704-0188 RJ

Public reporting burden for this collection of information is estimated to average 30 days per response, including the time for reviewing instructions, searching existing data sources, gathering and maintaining the data needed, and completing and reviewing the collection of information. Send comments regarding this burden estimate or any other aspect of this collection of information, including suggestions for reducing this burden, to Washington Headquarters Services, Directors for Information Operations and Reports, 1215 Jefferson Davis Highway, Suite 1204, Arlington, VA 22202-4302, and to the Office of Management and Budget, Paperwork Reduction Project (0704-0188), Washington, DC 20503. Please do not return your form to either of these addresses.

1. PART OR DRAWING NO. (CAGE) NOMENCLATURE	2. CODE INDENT	3. SPI NO.
57K1926-001 (19207) COVER KIT, TAN, MTV/ MTVT	19207	AK14369658
4. NATIONAL STOCK NO.	**5. DATE OF DRAWING**	**6. REVISION**
2540-01-436-9658	03/27/2012	F

7. QUP	8. ICQ	9. UNIT PACK WT. (LB)	10. UNIT PACK CU (CU. FT.)	11. UNIT PACK SIZE (INCHES)
1 EACH	NONE	758.0	70.144	95.8 X 63.9 X19.8

12. MILITARY PRESERVATION
METHOD 10

13. CLEANING
MIL-STD-2073-1D, PROCEDURE 1

14. DRYING
MIL-STD-2073-1D

15. PACKING

a. LEVEL A
MIL-STD-2073-1D AND NOTE X

b. LEVEL B
NOT APPLICABLE

16. MARKING
MIL-STD-129 AND NOTE E - X

18. STEPS	19. REQD	20. DESCRIPTION
1D	1	**UNIT CONTAINER**: ASTM D6251, (MODIFIED), TY III, CL 2, ST A2
		(1/4" SPACE)TREATMENT A, LOAD TY 2, SIZE 95 X 61-5/8 X 14.
2C-W		**CUSHIONING, BLOCKING AND BRACING**: SEE NOTES.
3(O-T)	6	**BAG**: MIL-DTL-117, STYLE 1, TYPE I, CLASS C, SIZES
		12 X 20 (QTY.2), 6 X 12 (QTY. 4).
4V	1	**CONTAINER**: ASTM D 5118, STYLE FTC, TYPE CF
		CLASS WR, VARIETY SW, GRADE V3C, SIZE 30 X 25 X 13-1/4.
5W	6	**WRAP**: MIL-PRF-121, TYPE II, GRADE A, CLASS 2
		SIZE 50 X 4 (QTY 4), SIZE 90 X 4 (QTY 1), 20 X 3 (QTY 1).

17. NOTES/DRAWING

A. QUALITY ASSURANCE PROVISIONS:

INSPECT THE PRESERVATION AND UNIT PACK IN ACCORDANCE WITH MIL-STD-2073-1. INSPECT PACKING IN ACCORDANCE WITH MIL-STD-1186 AND THE APPLICABLE CONTAINER SPECIFICATION.

B. KIT CONTENTS LIST

Segregated Pack Number (SPN)	Part Number	Cage	Item Description	Item Qty.
1			**CONSOLIDATION FOR SPN 1A, 1B, 1C AND 1D.**	**1**
1A	12422279-001	19207	SOFT TOP BOW, FRONT AND REAR	1
1B	12422279-002	19207	SOFT TOP BOW, CENTER	1
1C	12422279-001	19207	SOFT TOP BOW, FRONT AND REAR	1
2	12422292	19207	BRACE, BOW SUPPORT	4
3	12420275	19207	PIPE, BLACK IRON	1
4	12422280-001	19207	TUBE, HORIZONTAL	5
5	12422280-002	19207	TUBE, HORIZONTAL	5
6			**SPN 6 IS NOT USED.**	
7			**CONSOLIDATION FOR SPN 7A, 7B, 7C, 7D, 7F, AND 7G.**	**1**
7A	12420023	19207	INSTALLATION INSTRUCTIONS, COVER KIT - MTV / MTVT (DRAWINGS)	1
7B	12420291	19207	STRAP	1
7C	12421716	19207	STRAP, TIEDOWN	3
7D	12420291-002	19207	STRAP	6
7E			SPN 7E IS NOT USED	
7F	12422305	19207	SUPPORT STRAP, SOFT TOP	2
7G	12420283-015	19207	COVER ASSEMBLY	1

SPECIAL PACKAGING INSTRUCTION

Form Approved -SS
OMB No. 0704-0188 RJ

Public reporting burden for this collection of information is estimated to average 30 days per response, including the time for reviewing instructions, searching existing data sources, gathering and maintaining the data needed, and completing and reviewing the collection of information. Send comments regarding this burden estimate or any other aspect of this collection of information, including suggestions for reducing this burden, to Washington Headquarters Services, Directors for Information Operations and Reports, 1215 Jefferson Davis Highway, Suite 1204, Arlington, VA 22202-4302, and to the Office of Management and Budget, Paperwork Reduction Project (0704-0188), Washington, DC 20503. Please do not return your form to either of these addresses.

1. PART OR DRAWING NO. (CAGE) NOMENCLATURE	2. CODE INDENT	3. SPI NO.
57K1926-001 (19207) COVER KIT, TAN, MTV/ MTVT	19207	AK14369658
4. NATIONAL STOCK NO.	**5. DATE OF DRAWING**	**6. REVISION**
2540-01-436-9658	03/27/2012	F

C. FABRICATE BLOCKS **"A"** THROUGH **"T"** CUSHION WRAPS **"U"** THROUGH **"Y"** AS SPECIFIED IN THE MATERIALS CHART BELOW.
FABRICATE PVC PIPES **"8"** AS SPECIFIED IN HARDWARE CHART ON PAGE 3.
FABRICATE BLOCK ASSEMBLY **"1"** (QTY 2) BY SECURING BLOCK **"C"** TO BLOCK **"A"** USING FASTENERS CONFORMING TO ASTM F1667 AS SHOWN IN FIGURE 8 ON PAGE 5.
FABRICATE BLOCK ASSEMBLY **"4"** (QTY 2) BY PLACING CARRIAGE BOLTS **"5"** AS SPECIFIED IN HARDWARE CHART ON PAGE 3 INTO BLOCK **"M"** AS SHOWN IN FIGURE 9 ON PAGE 5.

MATERIAL CHART

Pad or Block Number	ASTM D 6199, Group II, Lumber (Nominal Size)	PPP-C-1797, Type I, 1/8" Thick, Cushioning Wrap	A-A-55057, Type A, Sheathing Bonded with Exterior Glue, Plywood (Nom Thick)	Critical Dimensions (Inches) L	W	D	Qty	Comments
A	2 X 4			61-5/8			4	
B	SEE DIMENSIONS			11	4-1/4	1-1/2	4	
C	1 X 4			18			2	
D	2 X 2			18			2	
E	2 X 4			17-1/4			2	
F	2 X 4			41-3/4			1	
G	2 X 4			32			2	
H	2 X 6			24			1	
I	2 X 4			16			1	
J	2 X 4			14			4	FABRICATE AS SHOWN IN IN FIGURE 1 ON PAGE 3.
K	SEE COMMENTS						2	FABRICATE AS SHOWN IN FIGURE 2 ON PAGE 3.
L	1 X 6			23-5/8			2	FABRICATE AS SHOWN IN FIGURE 3 ON PAGE 3.
M	SEE COMMENTS						2	FABRICATE AS SHOWN IN FIGURE 4 ON PAGE 4.
N			3/8	14-3/4	5-1/2		2	
O	**"O" IS NOT USED**							
P	SEE COMMENTS			18	2	1-1/2	1	FABRICATE AS SHOWN IN FIGURE 5 ON PAGE 4.
Q	2 X 6			10			3	
R	SEE COMMENTS						2	FABRICATE AS SHOWN IN FIGURE 6 ON PAGE 4.
S			3/8	61-5/8	14		2	
T	4 x 4			91			4	FABRICATE AS SHOWN IN FIGURE 7 ON PAGE 4.
U		SEE DIMENSIONS		36	8		3	
V		SEE DIMENSIONS		6	6		2	
W		SEE DIMENSIONS		84	9		1	
X		SEE DIMENSIONS		9	6		2	
Y		SEE DIMENSIONS		19	6		4	
Z		SEE DIMENSIONS		24	12		2	

SPECIAL PACKAGING INSTRUCTION

Form Approved -SS
OMB No. 0704-0188 RJ

Public reporting burden for this collection of information is estimated to average 30 days per response, including the time for reviewing instructions, searching existing data sources, gathering and maintaining the data needed, and completing and reviewing the collection of information. Send comments regarding this burden estimate or any other aspect of this collection of information, including suggestions for reducing this burden, to Washington Headquarters Services, Directors for Information Operations and Reports, 1215 Jefferson Davis Highway, Suite 1204, Arlington, VA 22202-4302, and to the Office of Management and Budget, Paperwork Reduction Project (0704-0188), Washington, DC 20503. Please do not return your form to either of these addresses.

1. PART OR DRAWING NO. (CAGE) NOMENCLATURE	2. CODE INDENT	3. SPI NO.
57K1926-001 (19207) COVER KIT, TAN, MTV/ MTVT	19207	AK14369658
4. NATIONAL STOCK NO.	**5. DATE OF DRAWING**	**6. REVISION**
2540-01-436-9658	03/27/2012	F

HARDWARE

NUMBER	DESCRIPTION	SIZE	QTY.	COMMENTS
1	CARRIAGE BOLTS	3/8 INCH X 4 INCH	2	COMMERCIAL QUALITY STEEL WITH COMMERCIAL QUALITY ZINC PLATING IS ACCEPTABLE. SEE SPECIAL NOTE 1
2	FLAT WASHERS	3/8 INCH	6	
3	LOCKWASHERS	3/8 INCH	6	
4	NUT	3/8 INCH NC	6	
5	CARRIAGE BOLTS	3/8 X 8	4	
6	COMMERCIAL DECK SCREWS	NUMBER 8 X 3 INCH	32	PHILLIPS HEAD GALVANIZED FINISH
7	COMMERCIAL DECK SCREWS	NUMBER 8 X 1-1/2 INCH	20	
8	SCHEDULE 40 PVC PIPE	SIZE 1 ID X 3-1/4 LONG	10	ASTM D1785, COLOR OPTIONAL

SPECIAL NOTE 1: TO PREVENT LOOSENING OF NUTS AFTER INSTALLATION, APPLY PAINT, ASPHALTUM, OR MIL-PRF-16173 GRADE 1 PRESERVATIVE TO, OR PHYSICALLY NICK, THE EXPOSED THREADS OF THE BOLTS.

FIGURE 1

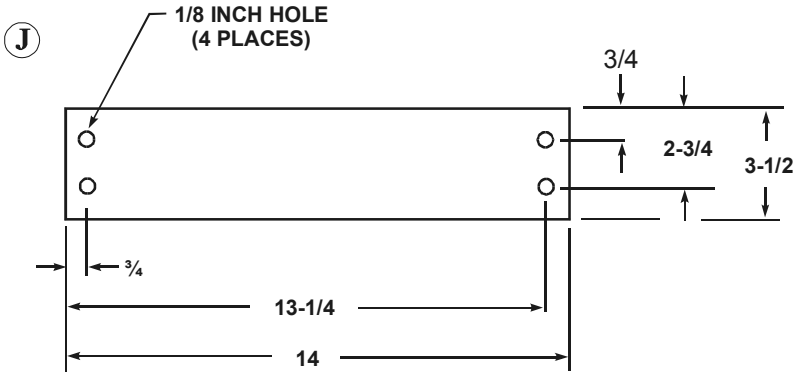

FIGURE 2

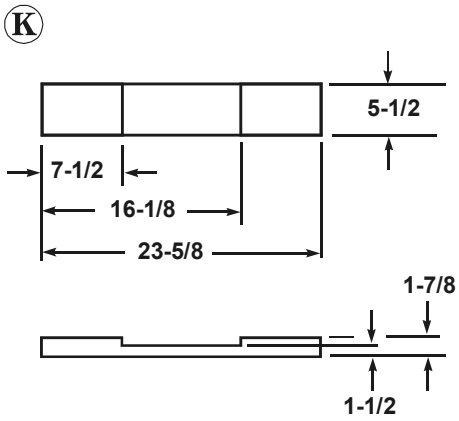

FIGURE 3

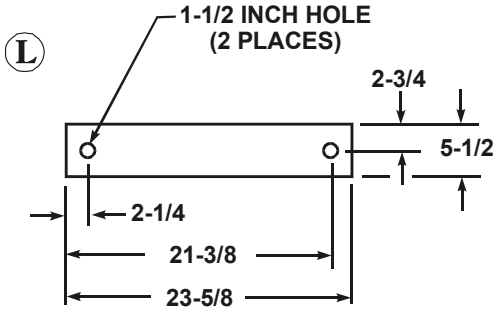

All dimensions are in inches.
All dimensions are actual.
All holes are dimensioned to center.

SPECIAL PACKAGING INSTRUCTION

Form Approved -SS
OMB No. 0704-0188
RJ

Public reporting burden for this collection of information is estimated to average 30 days per response, including the time for reviewing instructions, searching existing data sources, gathering and maintaining the data needed, and completing and reviewing the collection of information. Send comments regarding this burden estimate or any other aspect of this collection of information, including suggestions for reducing this burden, to Washington Headquarters Services, Directors for Information Operations and Reports, 1215 Jefferson Davis Highway, Suite 1204, Arlington, VA 22202-4302, and to the Office of Management and Budget, Paperwork Reduction Project (0704-0188), Washington, DC 20503. Please do not return your form to either of these addresses.

1. PART OR DRAWING NO. (CAGE) NOMENCLATURE	2. CODE INDENT	3. SPI NO.
57K1926-001 (19207) COVER KIT, TAN, MTV/ MTVT	19207	AK14369658
4. NATIONAL STOCK NO.	**5. DATE OF DRAWING**	**6. REVISION**
2540-01-436-9658	03/27/2012	F

FIGURE 4

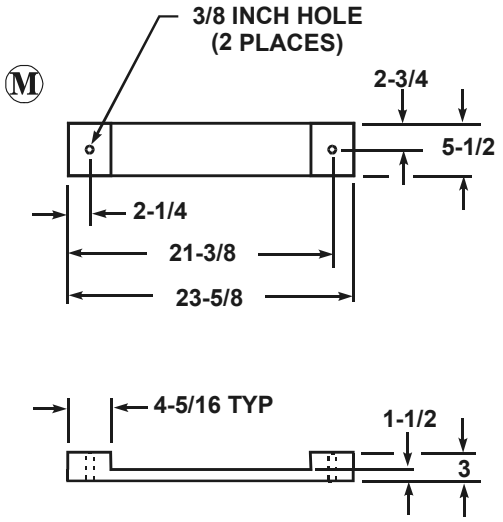

FIGURE 5

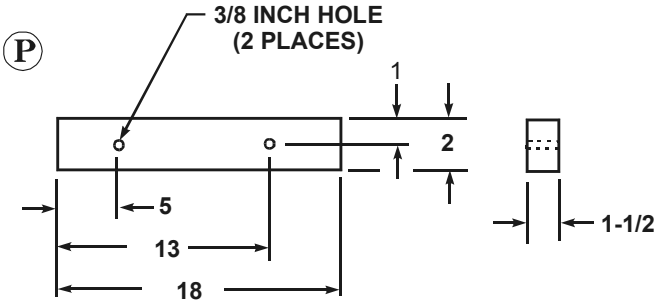

FIGURE 6

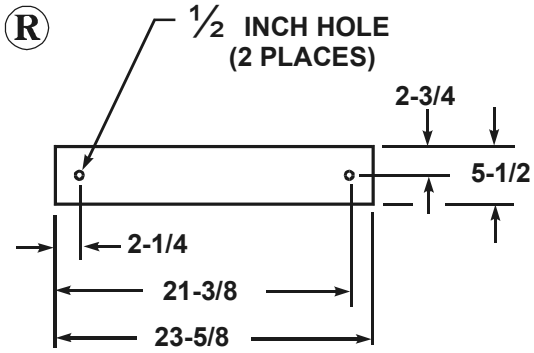

FIGURE 7

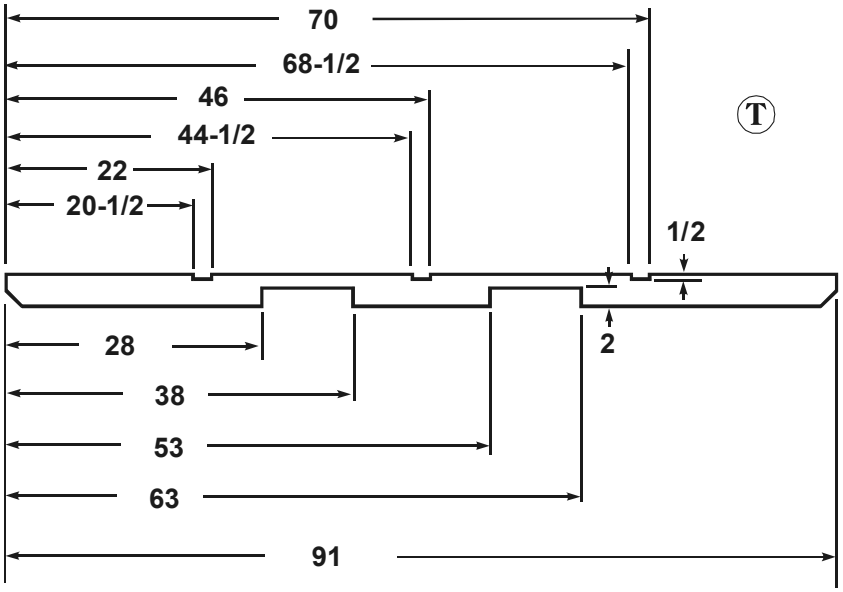

All dimensions are in inches.
All dimensions are actual.
All holes are dimensioned to center.

SPECIAL PACKAGING INSTRUCTION

Form Approved -SS
OMB No. 0704-0188 RJ

Public reporting burden for this collection of information is estimated to average 30 days per response, including the time for reviewing instructions, searching existing data sources, gathering and maintaining the data needed, and completing and reviewing the collection of information. Send comments regarding this burden estimate or any other aspect of this collection of information, including suggestions for reducing this burden, to Washington Headquarters Services, Directors for Information Operations and Reports, 1215 Jefferson Davis Highway, Suite 1204, Arlington, VA 22202-4302, and to the Office of Management and Budget, Paperwork Reduction Project (0704-0188), Washington, DC 20503. Please do not return your form to either of these addresses.

1. PART OR DRAWING NO. (CAGE) NOMENCLATURE	2. CODE INDENT	3. SPI NO.
57K1926-001 (19207) COVER KIT, TAN, MTV/ MTVT	19207	AK14369658
4. NATIONAL STOCK NO.	**5. DATE OF DRAWING**	**6. REVISION**
2540-01-436-9658	03/27/2012	F

FIGURE 8

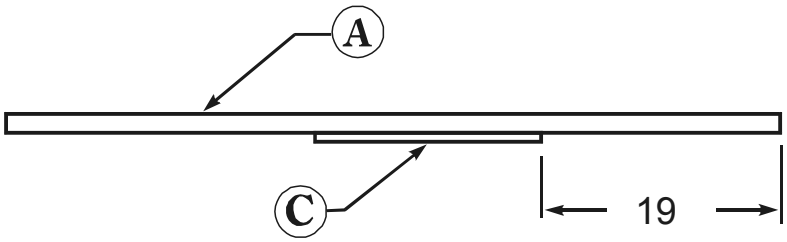

BLOCK ASSEMBLY 1

FIGURE 9

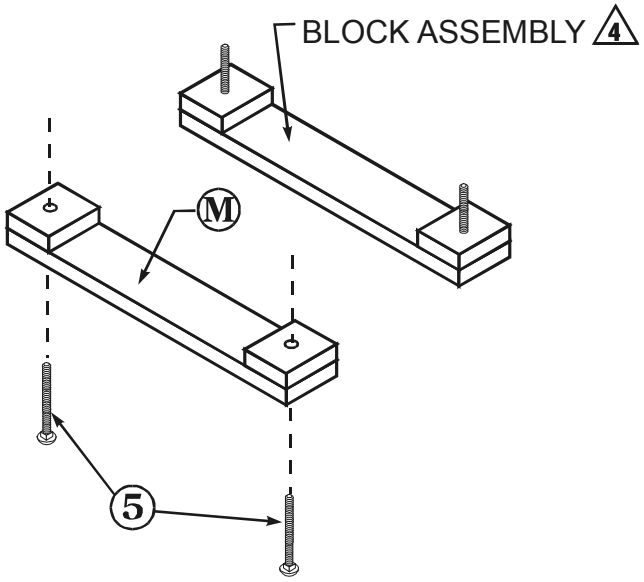

BLOCK ASSEMBLY 4

All dimensions are in inches.
All dimensions are actual.

SPECIAL PACKAGING INSTRUCTION

Form Approved -SS
OMB No. 0704-0188 RJ

Public reporting burden for this collection of information is estimated to average 30 days per response, including the time for reviewing instructions, searching existing data sources, gathering and maintaining the data needed, and completing and reviewing the collection of information. Send comments regarding this burden estimate or any other aspect of this collection of information, including suggestions for reducing this burden, to Washington Headquarters Services, Directors for Information Operations and Reports, 1215 Jefferson Davis Highway, Suite 1204, Arlington, VA 22202-4302, and to the Office of Management and Budget, Paperwork Reduction Project (0704-0188), Washington, DC 20503. Please do not return your form to either of these addresses.

1. PART OR DRAWING NO. (CAGE) NOMENCLATURE	2. CODE INDENT	3. SPI NO.
57K1926-001 (19207) COVER KIT, TAN, MTV/ MTVT	19207	AK14369658
4. NATIONAL STOCK NO.	**5. DATE OF DRAWING**	**6. REVISION**
2540-01-436-9658	03/27/2012	F

D. FABRICATION OF ASTM D6251, (MODIFIED), TY III, CL 2, ST A2 (1/4" SPACE), WITH TREATMENT A, LOAD TY 2 CONTAINER.

NOTE: NOMINAL 1 X 4 LUMBER SHALL BE USED FOR CLEATS.
ALPHA BLOCK OUTS ARE AS SPECIFIED IN MATERIALS CHART ON PAGE 2.
UNLESS OTHERWISE SPECIFIED ALL FASTENERS SHALL CONFORM TO SPECIFICATION ASTM F1667.

1. **CONTAINER SIZE:** 95 X 61-5/8 X 14 INSIDE DIMENSIONS.
2. FABRICATE **CONTAINER END ASSEMBLY "2"** (QTY 2) AS SHOWN IN FIGURE 10 BELOW.
   NOTE: END ASSEMBLY DOES NOT HAVE CLEATS ON THE OUTSIDE OF THE CONTAINER.
3. FABRICATE SIDE ASSEMBLY **"3"** (QTY 2) PER ASTM D6251, TY III, CL 2, ST A AS SHOWN IN FIGURE 11 ON PAGE 7.
4. FABRICATE THE BOTTOM OF THE CONTAINER AS SHOWN IN FIGURE 12 ON PAGE 7.
5. FABRICATE TOP OF CONTAINER AS PER SPECIFICATION ASTM D6251, TY III, CL 2, ST A2 (1/4" SPACE)
6. ASSEMBLE CONTAINER AS SHOWN IN FIGURE 13 ON PAGE 8.
7. SECURE BLOCKS **"E", "F", "G"** AND **"H"** TO THE BOTTOM AND SIDES OF CONTAINER AS SHOWN IN FGURE 13 ON PAGE 8.

FIGURE 10

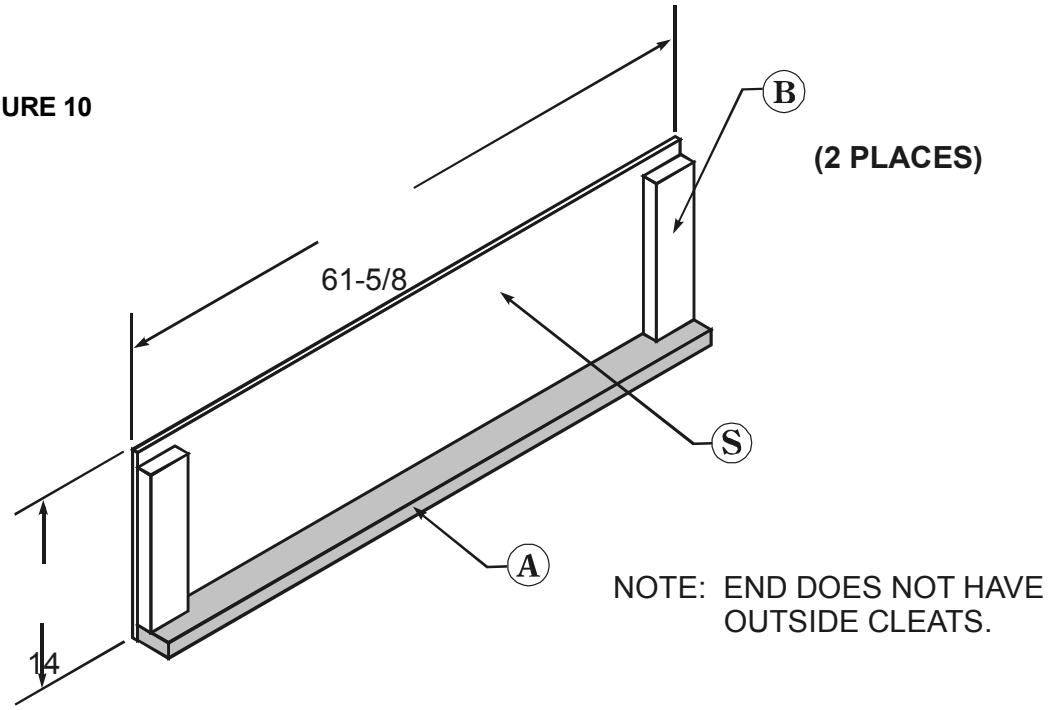

2

CONTAINER END ASSEMBLY

All dimensions are in inches.
All dimensions are actual.

SPECIAL PACKAGING INSTRUCTION

Form Approved -SS
OMB No. 0704-0188
RJ

Public reporting burden for this collection of information is estimated to average 30 days per response, including the time for reviewing instructions, searching existing data sources, gathering and maintaining the data needed, and completing and reviewing the collection of information. Send comments regarding this burden estimate or any other aspect of this collection of information, including suggestions for reducing this burden, to Washington Headquarters Services, Directors for Information Operations and Reports, 1215 Jefferson Davis Highway, Suite 1204, Arlington, VA 22202-4302, and to the Office of Management and Budget, Paperwork Reduction Project (0704-0188), Washington, DC 20503. Please do not return your form to either of these addresses.

1. PART OR DRAWING NO. (CAGE) NOMENCLATURE	2. CODE INDENT	3. SPI NO.
57K1926-001 (19207) COVER KIT, TAN, MTV/ MTVT	19207	AK14369658
4. NATIONAL STOCK NO.	**5. DATE OF DRAWING**	**6. REVISION**
2540-01-436-9658	03/27/2012	F

FIGURE 11

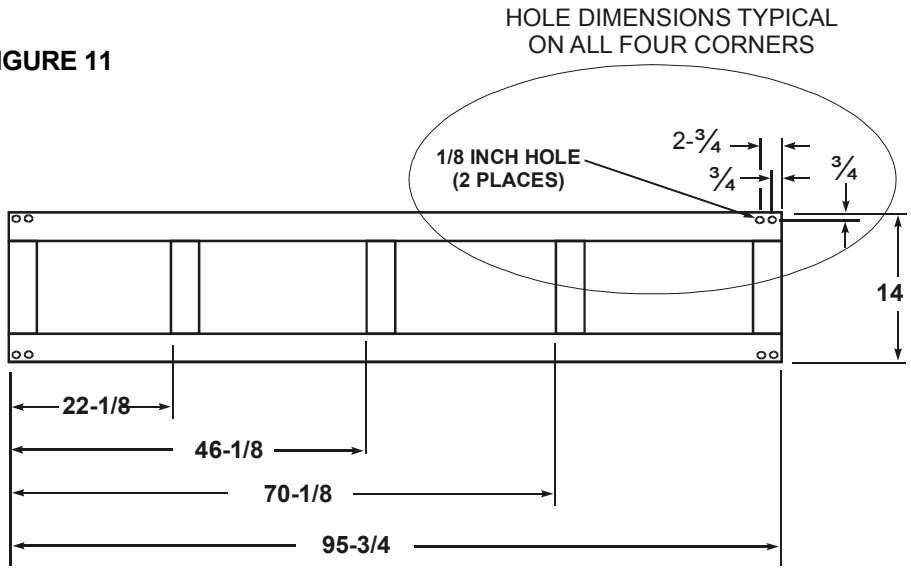

CONTAINER SIDE ASSEMBLY 3

NOTE: THE SIDES HAVE STANDARD OUTSIDE CLEATS.

FIGURE 12

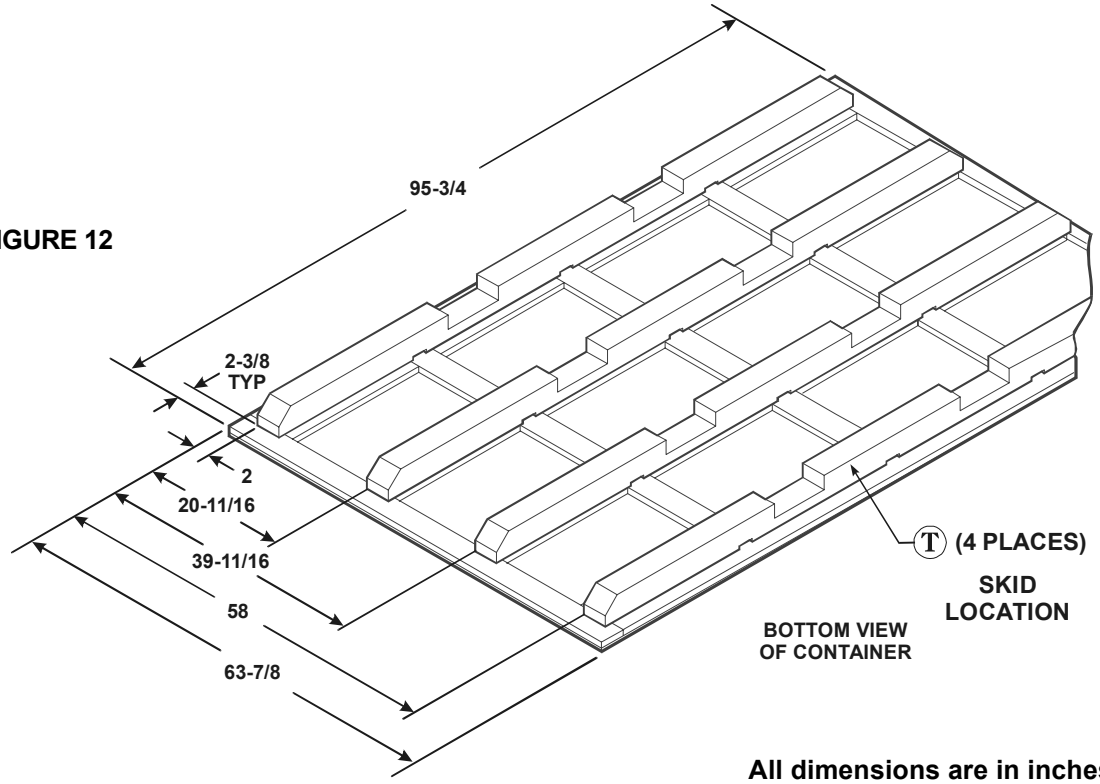

All dimensions are in inches.
All dimensions are actual.
All holes are dimensioned to center

SPECIAL PACKAGING INSTRUCTION

Form Approved -SS
OMB No. 0704-0188 RJ

Public reporting burden for this collection of information is estimated to average 30 days per response, including the time for reviewing instructions, searching existing data sources, gathering and maintaining the data needed, and completing and reviewing the collection of information. Send comments regarding this burden estimate or any other aspect of this collection of information, including suggestions for reducing this burden, to Washington Headquarters Services, Directors for Information Operations and Reports, 1215 Jefferson Davis Highway, Suite 1204, Arlington, VA 22202-4302, and to the Office of Management and Budget, Paperwork Reduction Project (0704-0188), Washington, DC 20503. Please do not return your form to either of these addresses.

1. PART OR DRAWING NO. (CAGE) NOMENCLATURE	2. CODE INDENT	3. SPI NO.
57K1926-001 (19207) COVER KIT, TAN, MTV/ MTVT	19207	AK14369658
4. NATIONAL STOCK NO.	**5. DATE OF DRAWING**	**6. REVISION**
2540-01-436-9658	03/27/2012	F

FIGURE 13

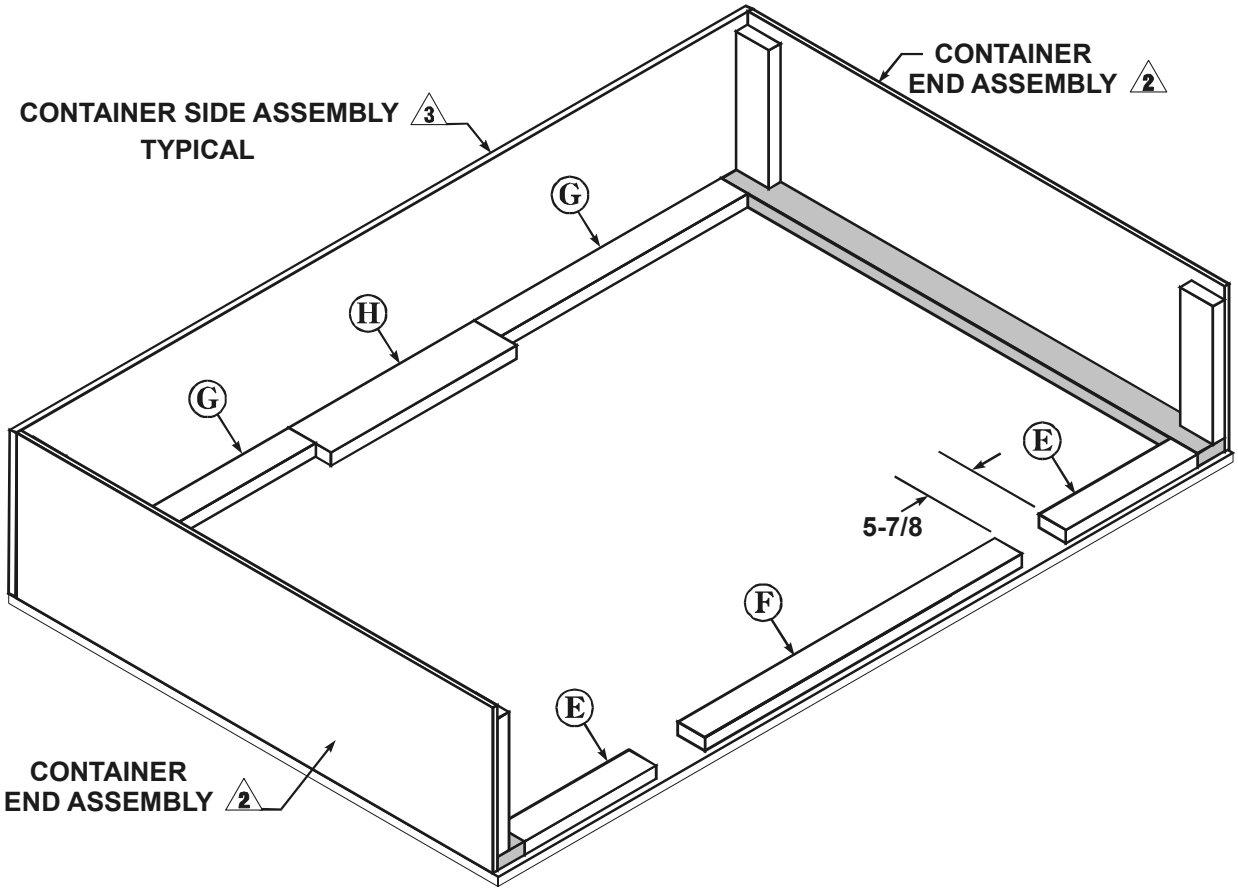

NOTE: SIDE ASSEMBLY "3" NOT SHOWN FOR CLARITY OF PLACING BLOCKS.

All dimensions are in inches.
All dimensions are actual.

SPECIAL PACKAGING INSTRUCTION

Form Approved -SS
OMB No. 0704-0188 RJ

Public reporting burden for this collection of information is estimated to average 30 days per response, including the time for reviewing instructions, searching existing data sources, gathering and maintaining the data needed, and completing and reviewing the collection of information. Send comments regarding this burden estimate or any other aspect of this collection of information, including suggestions for reducing this burden, to Washington Headquarters Services, Directors for Information Operations and Reports, 1215 Jefferson Davis Highway, Suite 1204, Arlington, VA 22202-4302, and to the Office of Management and Budget, Paperwork Reduction Project (0704-0188), Washington, DC 20503. Please do not return your form to either of these addresses.

1. PART OR DRAWING NO. (CAGE) NOMENCLATURE	2. CODE INDENT	3. SPI NO.
57K1926-001 (19207) COVER KIT, TAN, MTV/ MTVT	19207	AK14369658
4. NATIONAL STOCK NO.	**5. DATE OF DRAWING**	**6. REVISION**
2540-01-436-9658	03/27/2012	F

E. PREPARE **SPN 1A** AS FOLLOWS:

SPN	PART NUMBER	CAGE	ITEM DESCRIPTION	ITEM QTY
1A	12422279-001	19207	SOFT TOP BOW, FRONT AND REAR	1

1. **MARKING**: TAG FRONT AND REAR SOFT TOP BOW WITH **"SPN 1A"** IN ACCORDANCE WITH MIL-STD-129.
2. **INSPECTION**: INSPECT **SPN 1A** IN ACCORDANCE WITH THE CRITERIA FOR **METHOD 10.**

F. PREPARE AND SECURE **SPN 1B** AS FOLLOWS:

SPN	PART NUMBER	CAGE	ITEM DESCRIPTION	ITEM QTY
1B	12422279-002	19207	SOFT TOP BOW, CENTER	1

1. **MARKING**: TAG CENTER SOFT TOP BOW WITH **"SPN 1B"** IN ACCORDANCE WITH MIL-STD-129.
2. **INSPECTION**: INSPECT **SPN 1B** IN ACCORDANCE WITH THE CRITERIA FOR **METHOD 10.**

H. PREPARE AND SECURE **SPN 1C** AS FOLLOWS:

SPN	PART NUMBER	CAGE	ITEM DESCRIPTION	ITEM QTY
1C	12422279-001	19207	SOFT TOP BOW, FRONT AND REAR	1

1. **MARKING**: TAG FRONT AND REAR SOFT TOP BOW WITH **"SPN 1C"** IN ACCORDANCE WITH MIL-STD-129.
2. **INSPECTION**: INSPECT **SPN 1C** IN ACCORDANCE WITH THE CRITERIA FOR **METHOD 10.**

I. **CONSOLIDATION FOR SPN 1A, 1B AND 1C.**

1. PLACE PVC PIPE **"8",** AS SPECIFIED IN THE HARDWARE CHART ON PAGE 3, INTO BOWS AS SHOWN IN FIGURE 15 AND FIGURE 16 ON PAGE 13.
   NOTE: 5 PIECES OF PVC PIPE PER BOW. TOTAL OF 10 PIECES OF PVC PIPE.
2. PLACE BOWS TOGETHER AND SECURE USING CUSHIONING WRAP **"U"** (3 EACH), 3/4 INCH COMMERCIAL STEEL BANDING AND COMMERCIAL SEALS AS SHOWN IN FIGURE 15 AND FIGURE 16 ON PAGE 13.
3. **MARKING**: TAG ASSEMBLY **"SPN 1"** IN ACCORDANCE WITH MIL-STD-129.
4. **INSPECTION**: INSPECT **SPN 1** IN ACCORDANCE WITH THE CRITERIA FOR **METHOD 10.**

SPECIAL PACKAGING INSTRUCTION

Form Approved -SS
OMB No. 0704-0188 RJ

Public reporting burden for this collection of information is estimated to average 30 days per response, including the time for reviewing instructions, searching existing data sources, gathering and maintaining the data needed, and completing and reviewing the collection of information. Send comments regarding this burden estimate or any other aspect of this collection of information, including suggestions for reducing this burden, to Washington Headquarters Services, Directors for Information Operations and Reports, 1215 Jefferson Davis Highway, Suite 1204, Arlington, VA 22202-4302, and to the Office of Management and Budget, Paperwork Reduction Project (0704-0188), Washington, DC 20503. Please do not return your form to either of these addresses.

1. PART OR DRAWING NO. (CAGE) NOMENCLATURE	2. CODE INDENT	3. SPI NO.
57K1926-001 (19207) COVER KIT, TAN, MTV/ MTVT	19207	AK14369658
4. NATIONAL STOCK NO.	**5. DATE OF DRAWING**	**6. REVISION**
2540-01-436-9658	03/27/2012	F

J. PREPARE AND SECURE **SPN 2** AS FOLLOWS:

SPN	PART NUMBER	CAGE	ITEM DESCRIPTION	ITEM QTY
2	12422292	19207	BRACE, BOW SUPPORT	4

1. **MARKING**: TAG OR MARK EACH OF THE BOW SUPPORT BRACES WITH **"SPN 2"** IN ACCORDANCE WITH MIL-STD-129.
2. **INSPECTION**: INSPECT **SPN 2** IN ACCORDANCE WITH THE CRITERIA FOR **METHOD 10.**

K. PREPARE AND SECURE **SPN 3** AS FOLLOWS:

SPN	PART NUMBER	CAGE	ITEM DESCRIPTION	ITEM QTY
3	12420275	19207	PIPE, BLACK IRON	1

1. WRAP PIPE (2 PLACES) WITH CUSHIONING **"V"** AND SECURE WITH TAPE AS SHOWN IN FIGURE 14 BELOW.
2. **MARKING**: TAG OR MARK PIPE **"SPN 3"** IN ACCORDANCE WITH MIL-STD-129.
3. **INSPECTION**: INSPECT **SPN 3** IN ACCORDANCE WITH THE CRITERIA FOR **METHOD 10.**

L. PREPARE AND SECURE **SPN 4** AS FOLLOWS:

SPN	PART NUMBER	CAGE	ITEM DESCRIPTION	ITEM QTY
4	12422280-001	19207	TUBE, HORIZONTAL	5

1. **MARKING**: TAG OR MARK PIPE **"SPN 4"** IN ACCORDANCE WITH MIL-STD-129.
2. **INSPECTION**: INSPECT **SPN 4** IN ACCORDANCE WITH THE CRITERIA FOR **METHOD 10.**

M. PREPARE AND SECURE **SPN 5** AS FOLLOWS:

SPN	PART NUMBER	CAGE	ITEM DESCRIPTION	ITEM QTY
5	12422280-002	19207	TUBE, HORIZONTAL	5

1. **MARKING**: TAG OR MARK PIPE **"SPN 5"** IN ACCORDANCE WITH MIL-STD-129.
2. **INSPECTION**: INSPECT **SPN 5** IN ACCORDANCE WITH THE CRITERIA FOR **METHOD 10.**

N. **SPN "6" IS NOT USED.**

FIGURE 14

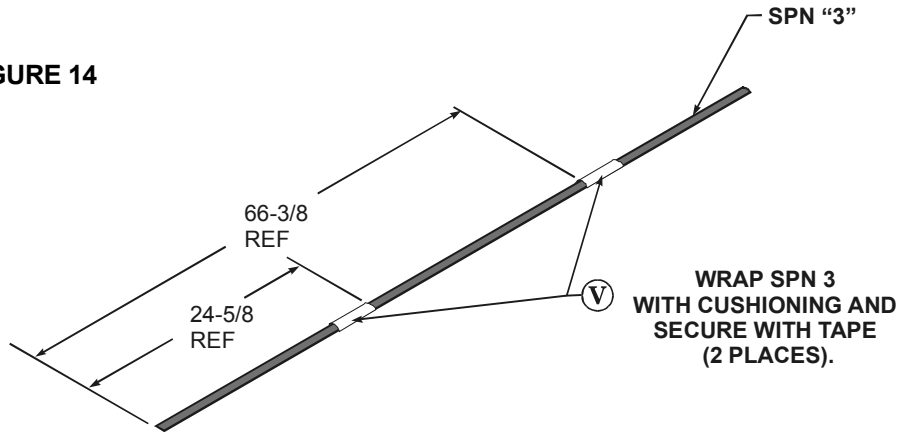

All dimensions are in inches.
All dimensions are actual.

SPECIAL PACKAGING INSTRUCTION

Form Approved -SS
OMB No. 0704-0188
RJ

Public reporting burden for this collection of information is estimated to average 30 days per response, including the time for reviewing instructions, searching existing data sources, gathering and maintaining the data needed, and completing and reviewing the collection of information. Send comments regarding this burden estimate or any other aspect of this collection of information, including suggestions for reducing this burden, to Washington Headquarters Services, Directors for Information Operations and Reports, 1215 Jefferson Davis Highway, Suite 1204, Arlington, VA 22202-4302, and to the Office of Management and Budget, Paperwork Reduction Project (0704-0188), Washington, DC 20503. Please do not return your form to either of these addresses.

1. PART OR DRAWING NO. (CAGE) NOMENCLATURE	2. CODE INDENT	3. SPI NO.
57K1926-001 (19207) COVER KIT, TAN, MTV/ MTVT	19207	AK14369658
4. NATIONAL STOCK NO.	**5. DATE OF DRAWING**	**6. REVISION**
2540-01-436-9658	03/27/2012	F

O. PREPARE **SPN 7A** AS FOLLOWS:

SPN	PART NUMBER	CAGE	ITEM DESCRIPTION	ITEM QTY
7A	12420023	19207	INSTALLATION INSTRUCTIONS, COVER KIT -LMTV/ LMTVT	1

1. **PRESERVATIVE**: NONE.
2. **BAG**: REFER TO BLOCK 18 - 20 STEP 3 FOR 12 X 20 BAG (QTY. 1). PLACE SPN 7A IN BAG AND HEAT SEAL BAG CLOSE.
3. **MARKING**: MARK BAG WITH **"SPN 7A"** IN ACCORDANCE WITH MIL-STD-129.
4. **INSPECTION**: INSPECT **SPN 7A** IN ACCORDANCE WITH THE CRITERIA FOR **METHOD 31.**

P. PREPARE **SPN 7B** AS FOLLOWS:

SPN	PART NUMBER	CAGE	ITEM DESCRIPTION	ITEM QTY
7B	12420291	19207	STRAP	1

1. **PRESERVATIVE**: NONE.
2. **BAG**: REFER TO BLOCK 18 - 20 STEP 3 FOR 6 X 12 BAG (QTY. 1). FOLD STRAP THEN PLACE IN BAG AND HEAT SEAL BAG CLOSE.
3. **MARKING**: MARK BAG WITH **"SPN 7B"** IN ACCORDANCE WITH MIL-STD-129.
4. **INSPECTION**: INSPECT **SPN 7B** IN ACCORDANCE WITH THE CRITERIA FOR **METHOD 31.**

Q. PREPARE **SPN 7C** AS FOLLOWS:

SPN	PART NUMBER	CAGE	ITEM DESCRIPTION	ITEM QTY
7C	12421716	19207	STRAP, TIEDOWN	3

1. **PRESERVATIVE**: NONE.
2. **BAG**: REFER TO BLOCK 18 - 20 STEP 3 FOR 6 X 12 BAG (QTY. 1). FOLD STRAPS THEN PLACE IN BAG AND HEAT SEAL BAG CLOSE.
3. **MARKING**: MARK BAG WITH **"SPN 7C"** IN ACCORDANCE WITH MIL-STD-129.
4. **INSPECTION**: INSPECT **SPN 7C** IN ACCORDANCE WITH THE CRITERIA FOR **METHOD 31.**

R. PREPARE **SPN 7D** AS FOLLOWS:

SPN	PART NUMBER	CAGE	ITEM DESCRIPTION	ITEM QTY
7D	12420291-002	19207	STRAP	6

1. **PRESERVATIVE**: NONE.
2. **BAG**: REFER TO BLOCK 18 - 20 STEP 3 FOR 6 X 12 BAG (QTY. 1). FOLD STRAPS THEN PLACE IN BAG AND HEAT SEAL BAG CLOSE.
3. **MARKING**: MARK BAG WITH **"SPN 7D"** IN ACCORDANCE WITH MIL-STD-129.
4. **INSPECTION**: INSPECT **SPN 7D** IN ACCORDANCE WITH THE CRITERIA FOR **METHOD 31**.

S. SPN 7E IS NOT USED

SPECIAL PACKAGING INSTRUCTION

Form Approved -SS
OMB No. 0704-0188 RJ

Public reporting burden for this collection of information is estimated to average 30 days per response, including the time for reviewing instructions, searching existing data sources, gathering and maintaining the data needed, and completing and reviewing the collection of information. Send comments regarding this burden estimate or any other aspect of this collection of information, including suggestions for reducing this burden, to Washington Headquarters Services, Directors for Information Operations and Reports, 1215 Jefferson Davis Highway, Suite 1204, Arlington, VA 22202-4302, and to the Office of Management and Budget, Paperwork Reduction Project (0704-0188), Washington, DC 20503. Please do not return your form to either of these addresses.

1. PART OR DRAWING NO. (CAGE) NOMENCLATURE	2. CODE INDENT	3. SPI NO.
57K1926-001 (19207) COVER KIT, TAN, MTV/ MTVT	19207	AK14369658
4. NATIONAL STOCK NO.	**5. DATE OF DRAWING**	**6. REVISION**
2540-01-436-9658	03/27/2012	F

T. PREPARE **SPN 7F** AS FOLLOWS:

SPN	PART NUMBER	CAGE	ITEM DESCRIPTION	ITEM QTY
7F	12422305	19207	SUPPORT STRAP, SOFT TOP	2

1. **PRESERVATIVE**: NONE.
2. **CUSHIONING WRAP**: REFER TO MATERIALS CHART ON PAGE 2 FOR CUSHIONING WRAP **"Z"** SIZE 24 X 12 (QTY. 2). ROLL OR FOLD EACH STRAP, WRAP EACH STRAP WITH CUSHIONING WRAP, THEN SECURE WRAP WITH ASTM D6123 TYPE II TAPE.
3. **BAG**: REFER TO BLOCK 18 - 20 STEP 3 FOR 12 X 20 BAG (QTY. 1). PLACE BOTH WRAPPED STRAPS IN BAG AND HEAT SEAL BAG CLOSE.
4. **MARKING**: MARK CONTAINER WITH **"SPN 7F"** IN ACCORDANCE WITH MIL-STD-129.
5. **INSPECTION**: INSPECT **SPN 7F** IN ACCORDANCE WITH THE CRITERIA FOR **METHOD 10.**

U. PREPARE **SPN 7G** AS FOLLOWS:

SPN	PART NUMBER	CAGE	ITEM DESCRIPTION	ITEM QTY
7G	12420283-015	19207	COVER ASSEMBLY	1

1. **PRESERVATIVE**: NONE.
2. FOLD FITTED COVER ASSY TO APPROXIMATE SIZE 29 X 24 X 12 .
3. **MARKING**: TAG COVER ASSY WITH **"SPN 7G"** IN ACCORDANCE WITH MIL-STD-129.
4. **INSPECTION**: INSPECT **SPN 7G** IN ACCORDANCE WITH THE CRITERIA FOR **METHOD 10.**

V. **CONSOLIDATION FOR SPN 7A, SPN 7B, SPN 7C, SPN 7D, SPN 7G** AND **SPN 7F** — **ITEM QTY** 1

1. **CONTAINER**: REFER TO BLOCK 18 - 20 STEP 4 FOR SIZE 30 X 25 X 13-1/4 ASTM D 5118 CONTAINER (QTY. 1).
2. PLACE **SPN 7G** (FITTED COVER ASSY) INTO CONTAINER. PLACE **SPN 7A, SPN 7B, SPN 7C, SPN 7D** AND **SPN 7F** INTO CONTAINER.
3. CLOSURE: CLOSE CONTAINER IN ACCORDANCE WITH ASTM D 1974, SEALING METHOD B OR METHOD C.
4. **MARKING**: MARK CONTAINER WITH **"SPN 7"** IN ACCORDANCE WITH MIL-STD-129.
5. **INSPECTION**: INSPECT **SPN 7** IN ACCORDANCE WITH THE CRITERIA FOR **METHOD 10.**

SPECIAL PACKAGING INSTRUCTION

Form Approved -SS
OMB No. 0704-0188
RJ

Public reporting burden for this collection of information is estimated to average 30 days per response, including the time for reviewing instructions, searching existing data sources, gathering and maintaining the data needed, and completing and reviewing the collection of information. Send comments regarding this burden estimate or any other aspect of this collection of information, including suggestions for reducing this burden, to Washington Headquarters Services, Directors for Information Operations and Reports, 1215 Jefferson Davis Highway, Suite 1204, Arlington, VA 22202-4302, and to the Office of Management and Budget, Paperwork Reduction Project (0704-0188), Washington, DC 20503. Please do not return your form to either of these addresses.

1. PART OR DRAWING NO. (CAGE) NOMENCLATURE	2. CODE INDENT	3. SPI NO.
57K1926-001 (19207) COVER KIT, TAN, MTV/ MTVT	19207	AK14369658
4. NATIONAL STOCK NO.	**5. DATE OF DRAWING**	**6. REVISION**
2540-01-436-9658	03/27/2012	F

FIGURE 15

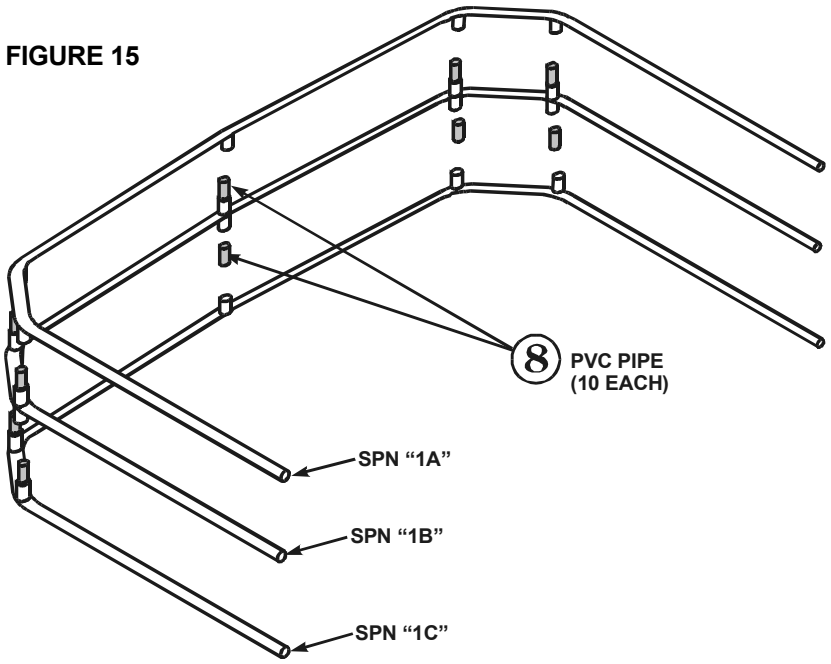

FIGURE 16

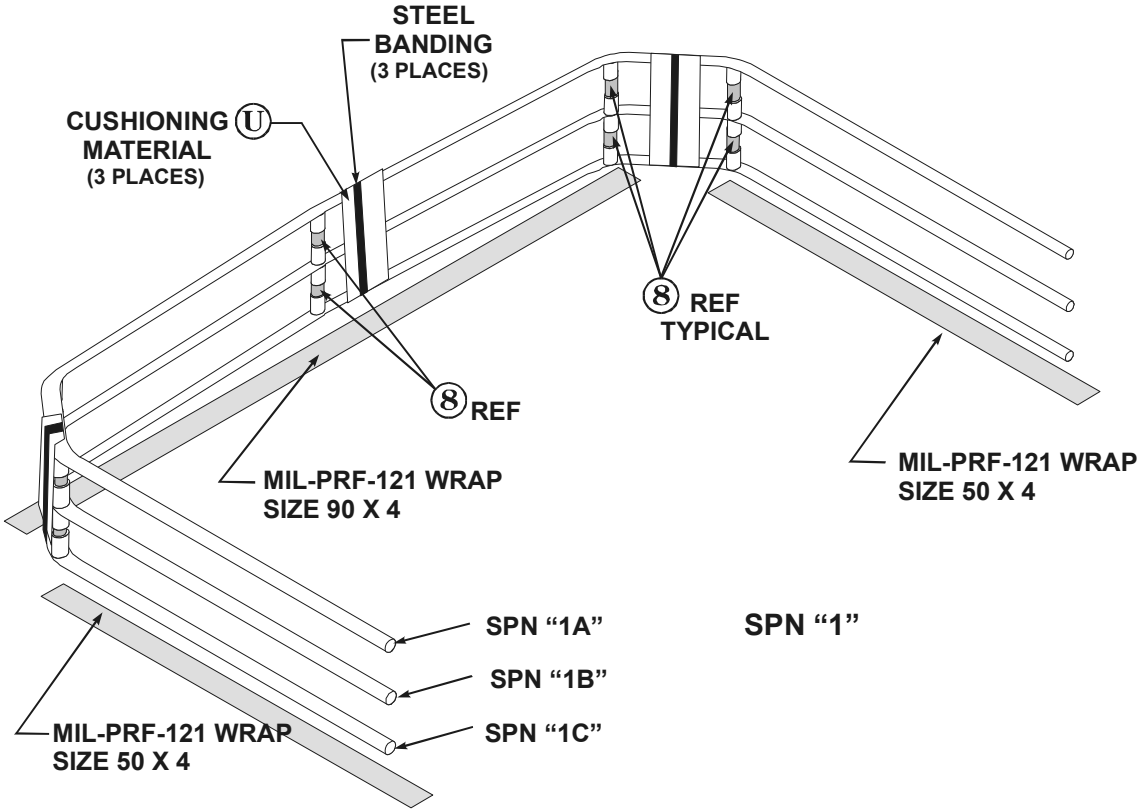

SPECIAL PACKAGING INSTRUCTION

Form Approved -SS
OMB No. 0704-0188 RJ

Public reporting burden for this collection of information is estimated to average 30 days per response, including the time for reviewing instructions, searching existing data sources, gathering and maintaining the data needed, and completing and reviewing the collection of information. Send comments regarding this burden estimate or any other aspect of this collection of information, including suggestions for reducing this burden, to Washington Headquarters Services, Directors for Information Operations and Reports, 1215 Jefferson Davis Highway, Suite 1204, Arlington, VA 22202-4302, and to the Office of Management and Budget, Paperwork Reduction Project (0704-0188), Washington, DC 20503. Please do not return your form to either of these addresses.

1. PART OR DRAWING NO. (CAGE) NOMENCLATURE	2. CODE INDENT	3. SPI NO.
57K1926-001 (19207) COVER KIT, TAN, MTV/ MTVT	19207	AK14369658
4. NATIONAL STOCK NO.	**5. DATE OF DRAWING**	**6. REVISION**
2540-01-436-9658	03/27/2012	F

W. CONSOLIDATION OF SPN 1, SPN 2, SPN 3, SPN 5, SPN 6, AND SPN 7.

NOTE: EXCEPT WHERE NOTED ALL FASTENERS SHALL CONFORM TO ASTM F1667.
ALL WRAPS ARE AS SPECIFIED IN STEP 5 OF BLOCKS 18, 19 AND 20 ON PAGE 1.

1. PLACE **"SPN 1"** INTO CONTAINER AS SHOWN IN FIGURE 17 BELOW.
   NOTE: PLACE WRAPS 50 X 4 (QTY 2), 90 x 4 (QTY 1) UNDER **SPN "1"** AS SHOWN IN FIGURE 16 ON PAGE 13.
2. SECURE BLOCK ASSEMBLIES **"1"** TO THE ENDS OF THE CONTAINER AS SHOWN IN FIGURE 17 BELOW, FIGURE 18A ON PAGE 15 AND FIGURE 19 ON PAGE 16.
   BLOCK ASSEMBLIES **"1"** SHALL BE SECURED USING USING SCREWS **"7"** FROM HARDWARE CHART ON PAGE 3 AS SHOWN IN FIGURE 18A ON PAGE 15. THE SCREWS SHALL BE DRIVEN THROUGH THE 3/8 PLYWOOD INTO BLOCK ASSEMBLY **"1"** AS SHOWN IN FIGURE 18A ON PAGE 15. THIS SUPPORTS THE TOP OF THE END ASSEMBLES AND ALSO SECURES **"SPN 1"** INTO THE CONTAINER.
   NOTE: WRAP 50 X 4 (QTY 2) SHALL BE PLACED UNDER BLOCK ASSEMBLIES **"1"** AS SHOWN IN FIGURE 17 BELOW.
   DRIVE SCREWS **"6"** (QTY 16) INTO CONTAINER AS SHOWN IN FIGURE 18B ON PAGE 15.
3. SECURE BLOCKS **"D"** (QTY 2) AND BLOCK **"I"** (QTY 1) INTO CONTAINER USING NAILS CONFORMING TO ASTM F1667 AS SHOWN IN FIGURE 17 BELOW.
4. PLACE BLOCK **"P"** ON TOP OF **"SPN 1"** AS SHOWN IN FIGURE 17 BELOW. USING IN BLOCK **"P"** AS A GUIDE MATCH DRILL TWO 3/8 INCH HOLES THROUGH THE SIDE OF THE CONTAINER AS SHOW IN FIGURE 17 BELOW.

FIGURE 17

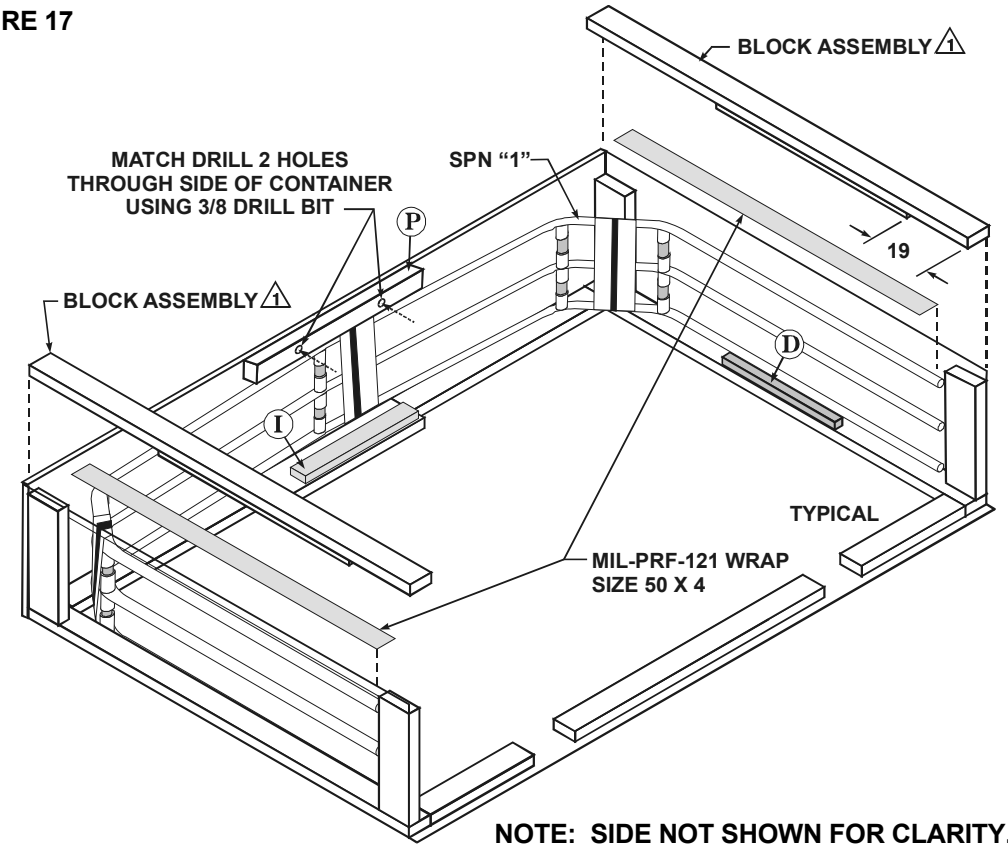

NOTE: SIDE NOT SHOWN FOR CLARITY.

All dimensions are in inches.
All dimensions are actual.

SPECIAL PACKAGING INSTRUCTION

Form Approved -SS
OMB No. 0704-0188
RJ

Public reporting burden for this collection of information is estimated to average 30 days per response, including the time for reviewing instructions, searching existing data sources, gathering and maintaining the data needed, and completing and reviewing the collection of information. Send comments regarding this burden estimate or any other aspect of this collection of information, including suggestions for reducing this burden, to Washington Headquarters Services, Directors for Information Operations and Reports, 1215 Jefferson Davis Highway, Suite 1204, Arlington, VA 22202-4302, and to the Office of Management and Budget, Paperwork Reduction Project (0704-0188), Washington, DC 20503. Please do not return your form to either of these addresses.

1. PART OR DRAWING NO. (CAGE) NOMENCLATURE	2. CODE INDENT	3. SPI NO.
57K1926-001 (19207) COVER KIT, TAN, MTV/ MTVT	19207	AK14369658
4. NATIONAL STOCK NO.	**5. DATE OF DRAWING**	**6. REVISION**
2540-01-436-9658	03/27/2012	F

FIGURE 18A

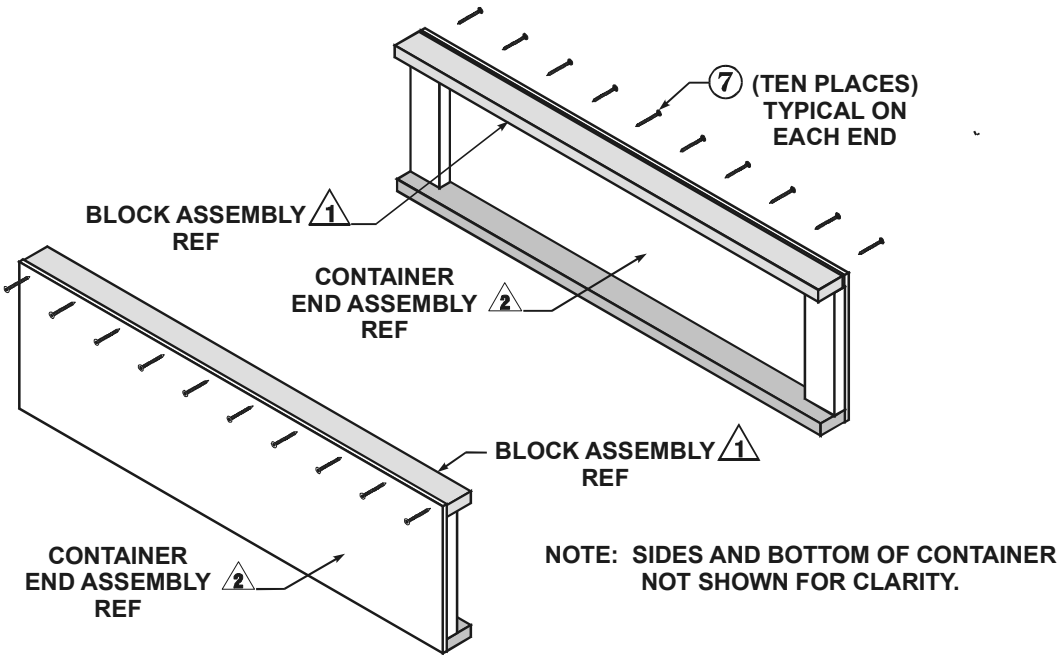

FIGURE 18B

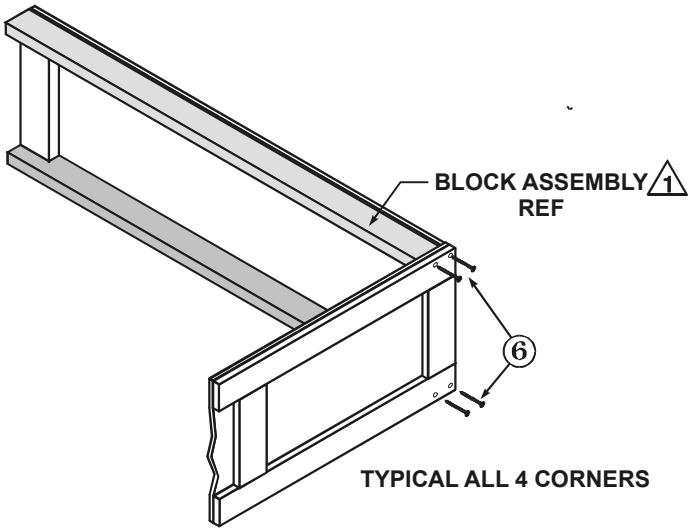

Public reporting burden for this collection of information is estimated to average 30 days per response, including the time for reviewing instructions, searching existing data sources, gathering and maintaining the data needed, and completing and reviewing the collection of information. Send comments regarding this burden estimate or any other aspect of this collection of information, including suggestions for reducing this burden, to Washington Headquarters Services, Directors for Information Operations and Reports, 1215 Jefferson Davis Highway, Suite 1204, Arlington, VA 22202-4302, and to the Office of Management and Budget, Paperwork Reduction Project (0704-0188), Washington, DC 20503. Please do not return your form to either of these addresses.

1. PART OR DRAWING NO. (CAGE) NOMENCLATURE	2. CODE INDENT	3. SPI NO.
57K1926-001 (19207) COVER KIT, TAN, MTV/ MTVT	19207	AK14369658
4. NATIONAL STOCK NO.	**5. DATE OF DRAWING**	**6. REVISION**
2540-01-436-9658	03/27/2012	F

NOTE "W" CONTINUED.

5. SECURE BLOCK **"P"** TO THE CONTAINER SIDE USING HARDWARE FROM HARDWARE CHART ON PAGE 3 AND AS SHOWN IN FIGURE 19 BELOW. **NOTE:** PLACE WRAP SIZE 20 X 3 BETWEEN BLOCK **"P"** AND SPN 1.

6. SECURE BLOCKS **"J"** (QTY 4) INTO CONTAINER USING HARDWARE FROM HARDWARE CHART ON PAGE 3 AND AS SHOWN IN FIGURE 19 BELOW.

FIGURE 19

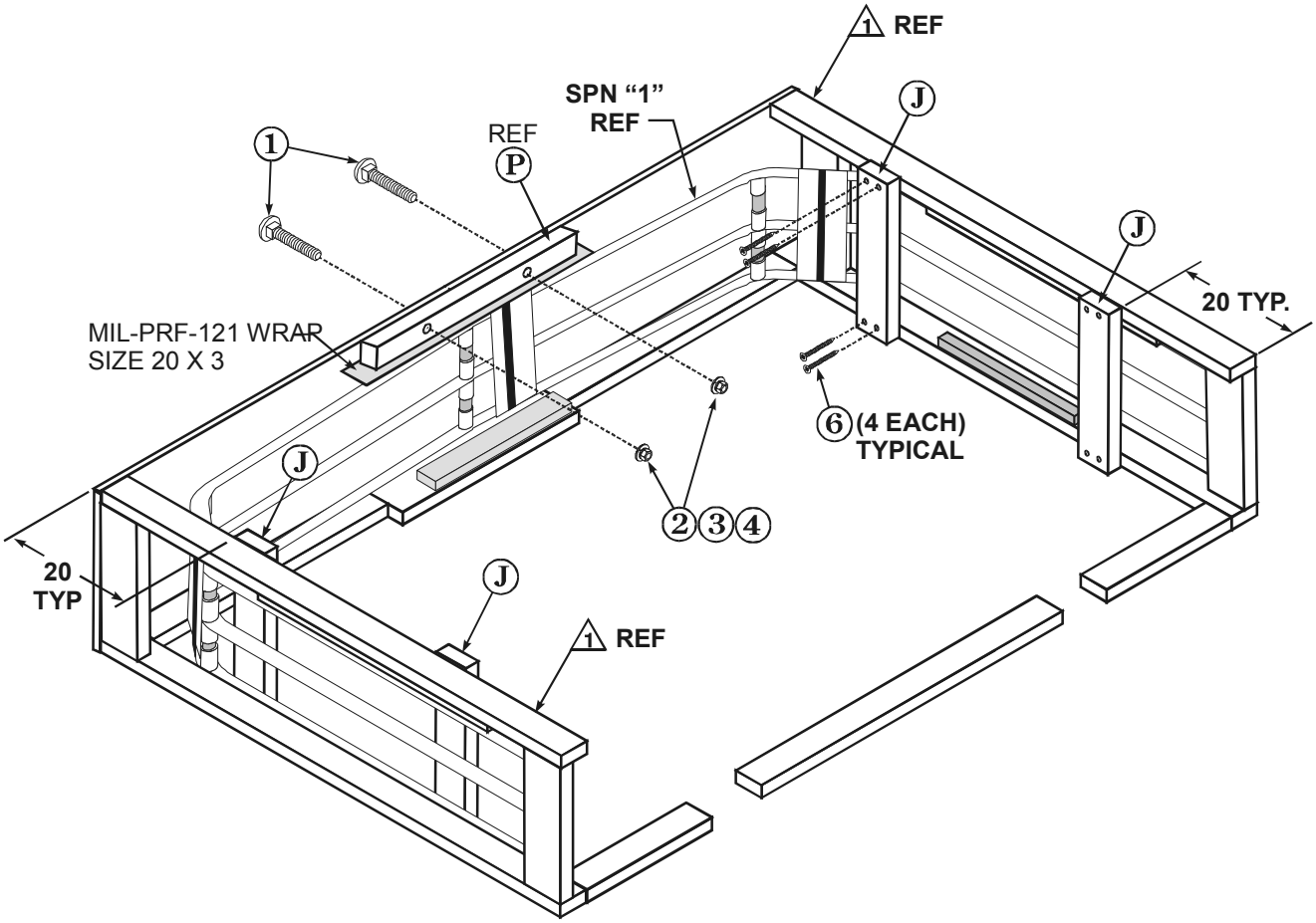

All dimensions are in inches.
All dimensions are actual.

SPECIAL PACKAGING INSTRUCTION

Form Approved -SS
OMB No. 0704-0188
RJ

Public reporting burden for this collection of information is estimated to average 30 days per response, including the time for reviewing instructions, searching existing data sources, gathering and maintaining the data needed, and completing and reviewing the collection of information. Send comments regarding this burden estimate or any other aspect of this collection of information, including suggestions for reducing this burden, to Washington Headquarters Services, Directors for Information Operations and Reports, 1215 Jefferson Davis Highway, Suite 1204, Arlington, VA 22202-4302, and to the Office of Management and Budget, Paperwork Reduction Project (0704-0188), Washington, DC 20503. Please do not return your form to either of these addresses.

1. PART OR DRAWING NO. (CAGE) NOMENCLATURE	2. CODE INDENT	3. SPI NO.
57K1926-001 (19207) COVER KIT, TAN, MTV/ MTVT	19207	AK14369658
4. NATIONAL STOCK NO.	**5. DATE OF DRAWING**	**6. REVISION**
2540-01-436-9658	03/27/2012	F

NOTE "W" CONTINUED.

7. PLACE CUSHIONING **"W"**, SUPPORT BRACES **SPN 2** (QTY 4) AND CUSHIONING **"X"** (QTY 2) INTO CONTAINER AS SHOWN IN FIGURE 20 AND FIGURE 21 BELOW.

8. SECURE **SPN 2** TO THE FLOOR USING BLOCKS **"K"** AND NAILS AS SHOWN IN FIGURE 20 AND FIGURE 21 BELOW. **NOTE:** THE FASTENERS SHALL BE DRIVEN INTO THE 4 X 4 SKIDS OF THE CONTAINER.

9. SECURE BLOCKS **"L"** (QTY 2) TO BLOCKS **"K"** USING NAILS AS SHOWN IN FIGURE 21 BELOW.

10. SECURE BLOCK ASSEMBLY **"4"** (QTY 2) TO BLOCKS **"L"** USING NAILS AS SHOWN IN FIGURE 21 BELOW

FIGURE 20

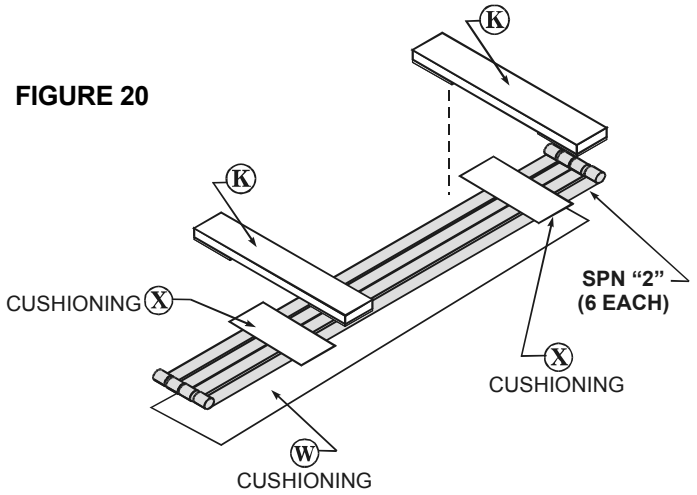

FIGURE 21

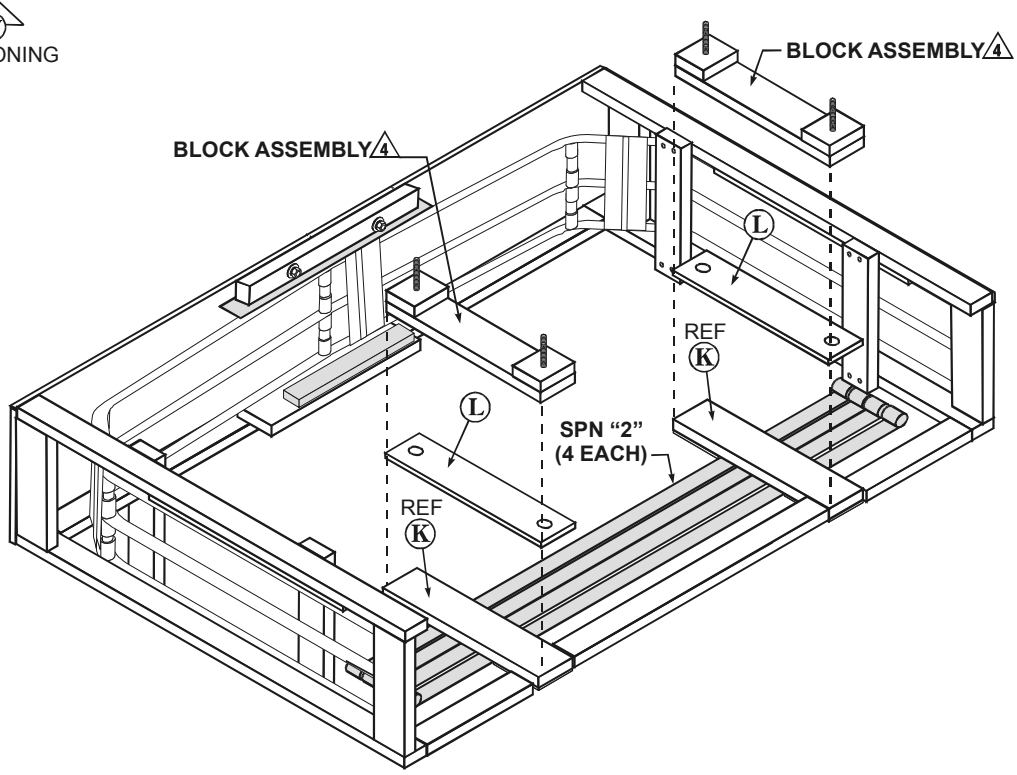

Public reporting burden for this collection of information is estimated to average 30 days per response, including the time for reviewing instructions, searching existing data sources, gathering and maintaining the data needed, and completing and reviewing the collection of information. Send comments regarding this burden estimate or any other aspect of this collection of information, including suggestions for reducing this burden, to Washington Headquarters Services, Directors for Information Operations and Reports, 1215 Jefferson Davis Highway, Suite 1204, Arlington, VA 22202-4302, and to the Office of Management and Budget, Paperwork Reduction Project (0704-0188), Washington, DC 20503. Please do not return your form to either of these addresses.

1. PART OR DRAWING NO. (CAGE) NOMENCLATURE	2. CODE INDENT	3. SPI NO.
57K1926-001 (19207) COVER KIT, TAN, MTV/ MTVT	19207	AK14369658
4. NATIONAL STOCK NO.	**5. DATE OF DRAWING**	**6. REVISION**
2540-01-436-9658	03/27/2012	F

NOTE "W" CONTINUED.

11. PLACE CUSHION **"Y"** (QTY 4), **SPN 3, SPN 4** (QTY 5) AND **SPN 5** (QTY 5) INTO CONTAINER AS SHOWN IN FIGURE 22 AND FIGURE 23 ON PAGE 19.
    NOTE: ADJUST CUSHIONING ON SPN 3 SO THE CUSHIONING RESTS ON WOOD BLOCKING.

12. SECURE PIPES INTO CONTAINER USING BLOCKS **"N",** BLOCKS **"R"**, HARDWARE **"2",. "3"** AND **"4"** FROM HARDWARE CHART ON PAGE 3 AND AS SHOWN IN FIGURE 23 ON PAGE 19.

13. PLACE **SPN 7** INTO CONTAINER AS SHOWN IN FIGURE 23 ON PAGE 19.

14. SECURE BLOCKS **"Q"** (QTY 3) TO THE BOTTOM OF THE CONTAINER USING NAILS AS SHOWN IN FIGURE 23 ON PAGE 19.

X. THE UNIT CONTAINER IS THE SHIPPING CONTAINER.

1. **IDENTIFICATION**: PROVIDE PACKING LIST WITH CONSOLIDATED PACK IN ACCORDANCE WITH MIL-STD-129. ON THE PACKING LIST, IDENTIFY THE ITEMS WITHIN EACH SEGREGATED PACK TOGETHER WITH THEIR SEGREGATED PACK NUMBER.
2. **INSPECTION**: INSPECT **57K1926-001 (19207) COVER KIT, TAN, MTV/ MTVT** IN ACCORDANCE WITH THE CRITERIA FOR **METHOD I0**.
3. **CLOSURE**: THE CONTAINER SHALL BE CLOSED IN ACCORDANCE WITH ASTM D6251.
   NOTE: CONTAINER MUST BE STEEL BANDED IN ACCORDANCE WITH SPECIFICATION ASTM D6251.

SPECIAL PACKAGING INSTRUCTION

Form Approved -SS
OMB No. 0704-0188
RJ

Public reporting burden for this collection of information is estimated to average 30 days per response, including the time for reviewing instructions, searching existing data sources, gathering and maintaining the data needed, and completing and reviewing the collection of information. Send comments regarding this burden estimate or any other aspect of this collection of information, including suggestions for reducing this burden, to Washington Headquarters Services, Directors for Information Operations and Reports, 1215 Jefferson Davis Highway, Suite 1204, Arlington, VA 22202-4302, and to the Office of Management and Budget, Paperwork Reduction Project (0704-0188), Washington, DC 20503. Please do not return your form to either of these addresses.

1. PART OR DRAWING NO. (CAGE) NOMENCLATURE	2. CODE INDENT	3. SPI NO.
57K1926-001 (19207) COVER KIT, TAN, MTV/ MTVT	19207	AK14369658
4. NATIONAL STOCK NO.	**5. DATE OF DRAWING**	**6. REVISION**
2540-01-436-9658	03/27/2012	F

FIGURE 22

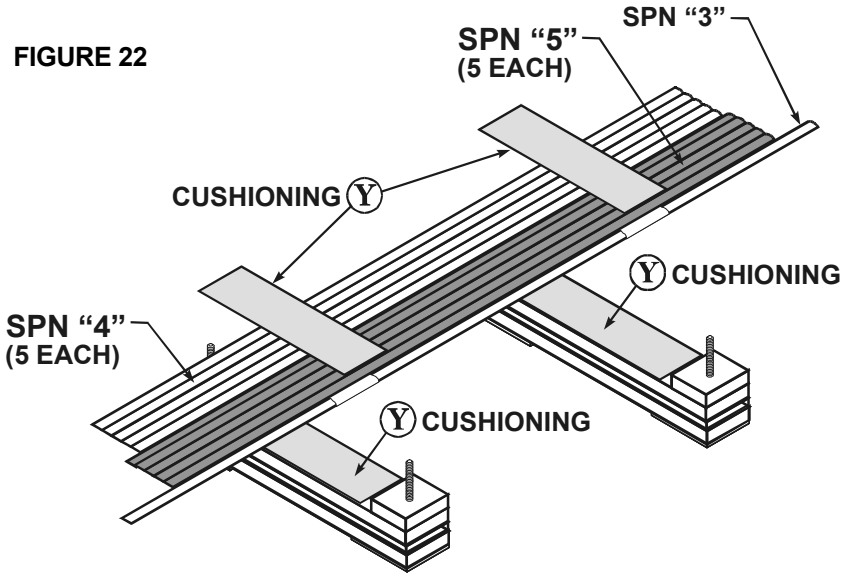
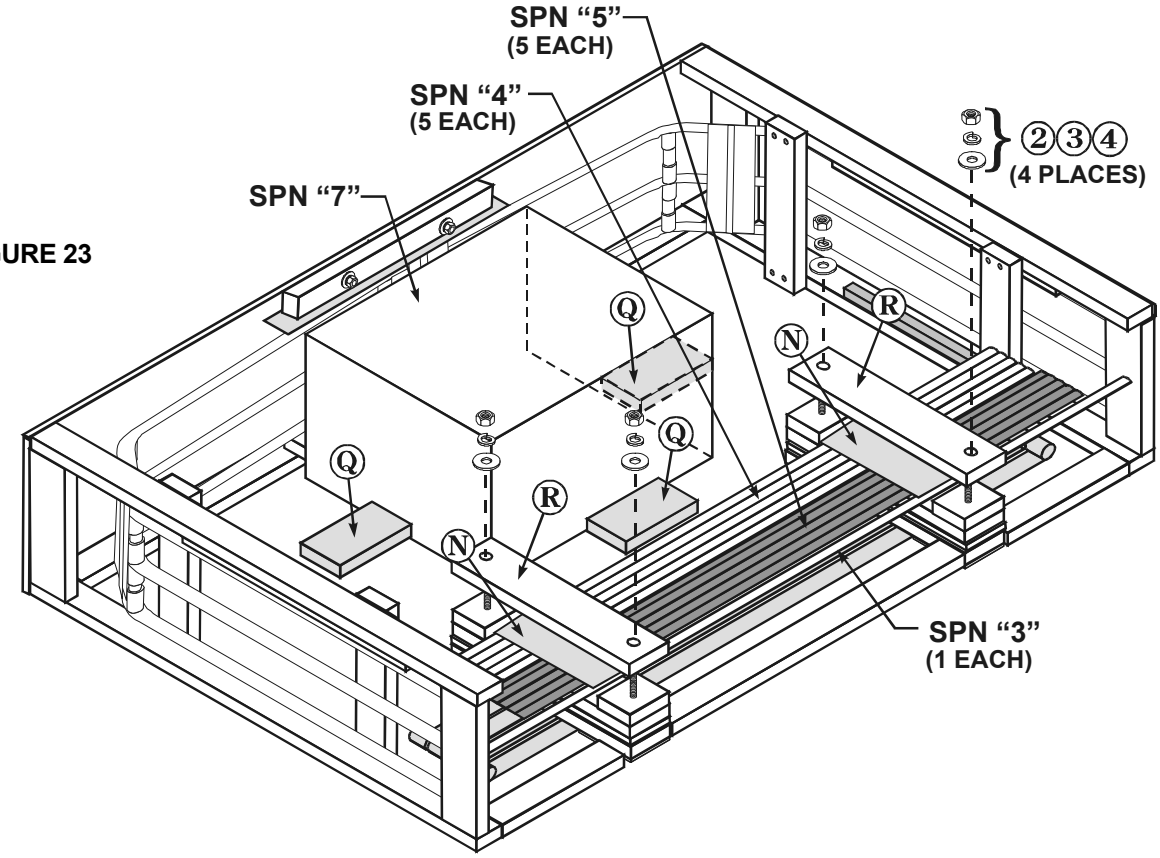
FIGURE 23