# US Army TARDEC
# Fuels and Lubricants Research Facility

## LOW-TEMPERATURE OIL PUMPABILITY INVESTIGATIONS IN A 6.2L DIESEL ENGINE

**by Edwin A. Frame and William E. Likos**

**Interim Report TFLRF No. 318, DTIC No. AD A382457**

**Problem:** Low-Temperature operability is an important requirement for U.S. Army equipment. Adequate engine oil pumpability at low temperatures is essential for maintaining mobility readiness.

**Objective:** The objective of the project was to determine the low-temperature oil pumpability characteristics of future-generation synthetic high-temperature lubes, current-generation petroleum-based lubricants, and used diesel engine oils.

**Importance of Project:** In this project important issues concerning the low-temperature performance of petroleum oils, synthetic arctic oils, advanced high-temperature oils, and used oils were addressed and defined.

**Technical Approach:** Low-temperature engine oil pumpability investigations were conducted in a 6.2L diesel engine. The engine was installed in a cold box chamber, and investigations were conducted at temperatures as low as -33°F. Oil pumpability times were measured.

**Accomplishments:** Borderline oil pumpability temperatures were defined for various petroleum and synthetic engine oils. The effects of soot in used engine oil on oil pumpability was determined.

**Military Impact:** Low-temperature oil pumpability characteristics are important in setting the ambient temperature use limits of engine oils in military equipment. Adequate low-temperature oil pumpability insures Army ground mobility.

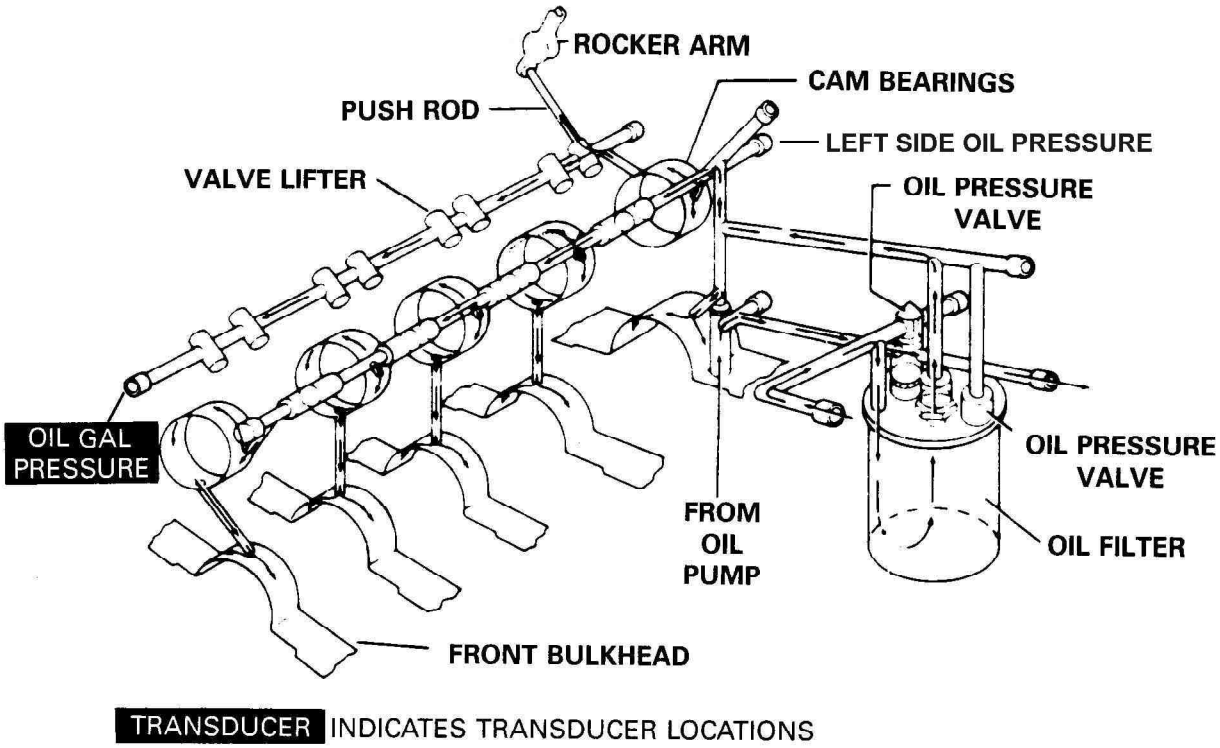


**GM 6.2L Engine Lubrication System**